PERGAMON

Journal of Structural Geology 21 (1999) 1019–1026

JOURNAL OF STRUCTURAL GEOLOGY

www.elsevier.nl/locate/jstrugeo

Fault relays, bends and branch-lines

J.J. Walsh*, J. Watterson, W.R. Bailey, C. Childs

Fault Analysis Group, Department of Earth Sciences, University of Liverpool, Liverpool L69 3BX, UK

Received 6 April 1998; accepted 11 January 1999

Abstract

Branch-lines between normal faults and their sub-parallel splays mapped from 3D seismic reflection data show a range of forms from straight lines to closed loops. The different geometries are interpreted as representing stages in the failure of relay zones and in the progressive replacement of fault tip-lines with fault branch-lines. The geometries of these normal fault branch-lines are similar to those for thrusts previously inferred from limited two-dimensional data. The orientation of the axis of a relay and its associated bends relative to a fault slip direction is identified as an important control on the structures developed within the relay. Neutral restraining and releasing bends can each occur on any fault type (normal, reverse and strike-slip), but data bias is a major factor in determining which bend geometry is most often observed with each fault type.

On normal faults the initial relay zone geometry controls the dominant branch-line orientation and the same control is likely on branch-lines associated with the other modes of faulting. A review of the relay geometries and strains occurring with all three modes of faulting highlights the role of the orientation of the mechanical anisotropy of a bedded sequence relative to the orientations of fault surface and slip directions. This relative orientation determines how the relay strain is accommodated and hence the degree of hard-linkage and development of branch-lines.

1. Introduction

The concept of branch-lines, originally developed as an aid to analysis and interpretation of thrusts (Boyer and Elliott, 1982), has not been developed significantly since the advent of good quality 3D seismic data. Here we address the question 'to what extent can seismic observations of normal fault branch-lines be applied to thrusts and strike-slip faults?' Branch-lines on normal faults form as a consequence of breaching of relay zones (Peacock, 1990; Childs et al., 1993; Anders and Schlische, 1994; Cartwright et al., 1996) and we argue that the same is probably true for reverse and strike-slip faults; much of the similarity between reverse and strike-slip faults, and normal faults is obscured by differences of terminology and by data bias, i.e. the different types of data most commonly available for each mode of faulting. The general comparability of structures associated with the three faulting modes has been noted previously (Woodcock and Fischer, 1986; Cruikshank et al., 1991).

It is argued that the differences between relay zones and structures associated with the three modes of faulting arise mainly from the differences in orientation of slip surfaces relative to the pronounced mechanical anisotropy that characterises most sedimentary sequences (Woodcock and Fischer, 1986; Peacock 1991; Peacock and Sanderson, 1992).

2. Concepts and terminology

Seismic mapping of normal fault arrays allows three-dimensional geometries, slip variations and branch-lines to be determined objectively by mapping of numerous branch-points. The term 'branch-line' was initially described as the line of intersection between a trailing thrust and leading thrust (Boyer and Elliott, 1982). Here, branch-line refers to a line of intersection between a 'master' fault and a synthetic splay, or between two segments of a multi-strand fault.

* Corresponding author.
E-mail address: fault@fag.esc.liv.ac.uk (J.J. Walsh)

0191-8141/99/$ - see front matter
PII: S0191-8141(99)00026-7

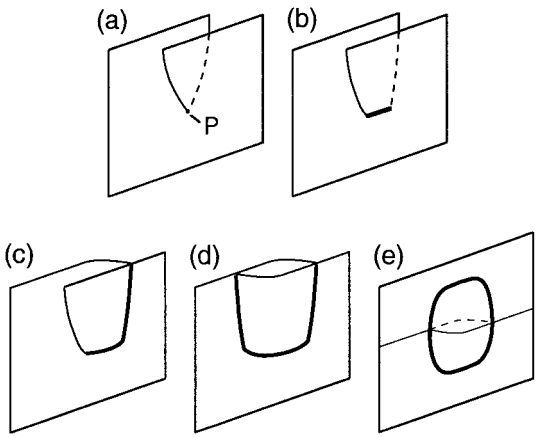

Fig. 1. Stages of development from a simple relay to a fault-bounded horse. (a) Both fault segments bounded by tip-lines intersecting at a unique branch-point (P). (b) Initial breaching with a straight branch-line (bold line). (c) Development of an L-shaped branch-line. (d) Double breaching with a U-shaped branch-line. (e) A closed branch-line loop bounding a horse. (c), (d) and (e) are all possible failed relay geometries, and (e) will only form if (c) and (d) are unstable. The fine lines in (e) are form lines.

We exclude from the definition intersection lines between opposed dipping faults, between faults of widely differing strikes and between unrelated faults. The orientations of such intersection-lines are a simple function of the overall orientations of the two intersecting fault surfaces.

Normal fault arrays are most often examined in map view rather than in cross-section. Because of this data bias, relays on normal faults, and the fault surface bends resulting from the breaching of relays, are most often seen in map view, where the axes of both the relays and the bends are sub-parallel to the slip direction. As further slip on a fault is parallel to the bend axis, the resulting relay structure remains relatively simple because the strains required to maintain compatibility are relatively simple, i.e. the bend is kinematically concordant. Thrusts are most often illustrated by a cross-section, which contains the slip direction, and strike-slip faults by a map view which also contains the slip direction. In both these cases the axes of the relays and their associated bends are normal to the slip direction and so are kinematically discordant, resulting in complex strains within the relay. Relay zones with axes normal to slip directions have given rise to the well-established terms 'restraining bend' (or 'compressional jog') and 'releasing bend' ('extensional jog'). Neutral bend is the equivalent term for the bends associated with slip-parallel relay zones (Peacock and Sanderson, 1991). An essential difference between neutral and non-neutral bends is that the strain at a neutral bend accommodates a screw dislocation type of discontinuity, by a simple shear strain, whereas strains at restraining and releasing bends accommodate an edge dislocation type of discontinuity requiring a pure shear strain. Edge dislocation strain is contractional, parallel to the slip direction at a restraining bend and extensional at a releasing bend. The contractional and extensional pure shear strains must be accommodated either by volumetric strains or by widening or thinning of the relay zone. It is emphasised that restraining, releasing and neutral bends can each occur on faults of all three modes. Types intermediate between neutral and either releasing or restraining bends are likely to occur but only the end members are considered here. A feature common to all types of relay is the high displacement gradients on the overlapping fault surfaces (Walsh and Watterson, 1989), and relay evolution is essentially determined by how these high displacement gradients are accommodated within a relay zone.

3. Examples of branch-lines between normal faults

Figure 1 summarises the development and breaching of a normal fault neutral relay zone by progressive replacement of fault tip-lines by branch-lines, as described by Huggins et al. (1995). Figs. 2–4 illustrate examples of L-, U- and O-shaped branch-lines, which represent three stages of the sequence shown in Fig. 1(c–e). A feature of all stages of relay evolution is that the aggregate throw of a relay system varies systematically and coherently, as has been demonstrated in both two and three dimensions for normal fault relays with neutral bends (Muraoka and Kamata, 1983; Walsh and Watterson, 1989, 1991; Peacock and Sanderson, 1991, 1994). As displacement on the two overlapping fault segments or lobes increases, the displacement gradients on the overlapping surfaces increases. These elevated displacement gradients are accommodated in an unbreached relay by continuous strains within the relay, without development of a discontinuity or hard-link. The distinction between continuous and discontinuous strains is, of course, scale dependent but we identify a discontinuity where a significant proportion of the displacement is concentrated within a volumetrically insignificant slip zone. In horizontally bedded sequences, where the mechanical anisotropy is favourably oriented with respect to a neutral bend on a normal fault, a continuous strain can be accommodated largely by bed-parallel slip, giving rise to relay ramps (Peacock and Sanderson, 1991; Huggins, 1996). As further displacement accrues on the faults, with consequent increase in displacement gradients where they overlap, a soft-linked relay will eventually become hard-linked along a breaching- or cross-fault (Peacock and Sanderson, 1991).

Figure 2(a) shows a map of a breached relay with a deactivated hanging wall splay (Childs et al., 1993,

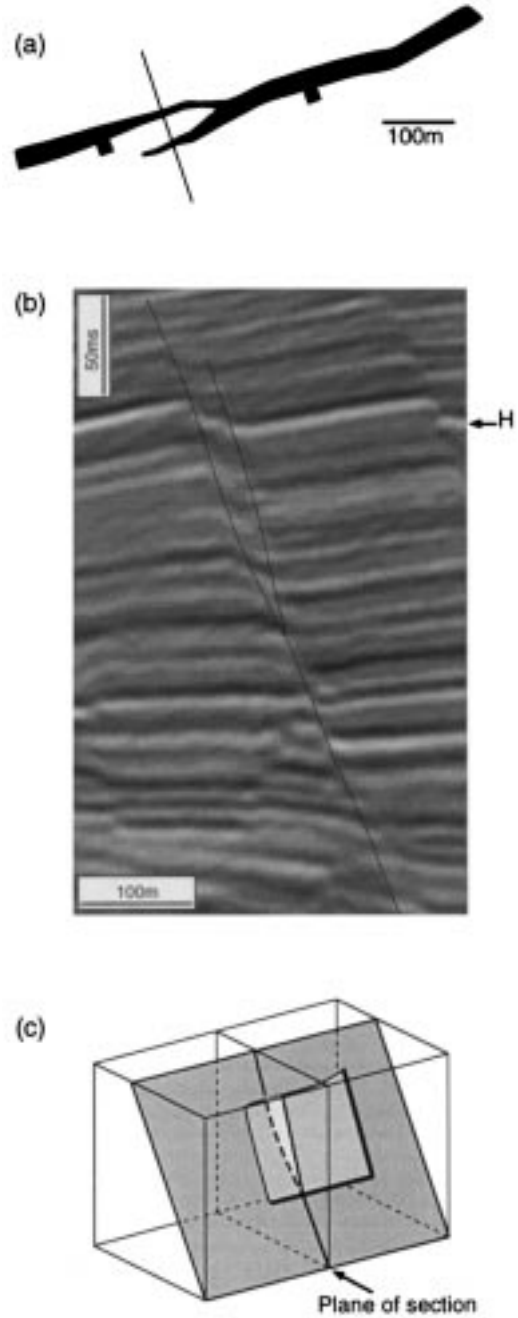

Fig. 2. (a) Fault polygons on a map of horizon H [arrowed in (b)] with location of cross-section in (b) indicated. (b) Seismic section with interpretation of traces of a master fault and a splay intersecting at a branch-point. Vertical to horizontal scale is approximately 1.5:1 (1 ms = ca 1.25 m). (c) Block diagram of fault interpretation with surface of master fault shaded, and boundaries of the splay fault defined by an L-shaped branch-line (heavy line) and curved tip-line. The plane of cross-section in (b) is indicated together with traces of master fault and splay on this section. The branch-line and tip-line of the splay fault are each defined by 10 data points on 10 seismic sections spaced at 12.5 m. Note the significant proportion of the fault displacement accommodated by a continuous strain, with bed rotation, between the overlapping faults. The structure is interpreted as breaching of a normal fault neutral relay by the footwall fault, with the relay originally terminating downwards at a branch-point at the approximate position of the cross-section (see Fig. 1a). The initial breaching probably occurred at some point on the down-dip segment of the branch-line. Seismic from the South-East Asia.

1995); a seismic section across this structure is shown in Fig. 2(b). The extent of the hanging wall splay, which is bounded by an L-shaped branch-line and an L-shaped tip-line, is shown in Fig. 2(c) and corresponds to the stage represented by Fig. 1(c). The development of this structure from an original relay is inferred from analyses of breached relays by throw back-stripping (Petersen et al., 1992; Childs et al., 1993). Breaching by the cross-fault resulted in a neutral fault bend which, being parallel to the slip direction, is kinematically concordant.

Figure 3(b) shows a footwall splay bounded by a U-shaped branch-line, together with an upper tip-line, corresponding to Fig. 1(d). A map view of the structure (Fig. 3a), shows a classical rejoining splay (Boyer and Elliott, 1982; Ramsay and Huber, 1987, fig. 23.4), and a seismic cross-section (Fig. 3c) shows the overlap region terminating downwards at a branch-point and remaining 'open' upwards. Interpretation of the structure as a doubly breached relay is illustrated in Fig. 3(d). The smaller throw on the footwall bounding fault suggests that it accommodated very little slip following breaching and is thus a splay; this conclusion is consistent with the straighter trace of the hanging wall bounding fault, as seen in Fig. 3(c).

Figure 4 shows a closed branch-line surrounding a horse which is elongate in the slip direction, defining the axis of the inferred original relay. The main fault on the cross-section (Fig. 4a) has a straight trace which is also indicative of a slip-parallel relay axis. The data available do not show conclusively that this structure originated as a relay, but we interpret it as representing a further development of the structure shown in Fig. 3, corresponding to Fig. 1(e). Although throws on the two faults bounding the horse show the sympathetic displacement variations expected for a breached relay, the geometry is also consistent with that of a side-wall rip-out (Swanson, 1989).

Each of the branch-line and splay geometries shown in Figs. 2–4 is interpreted as a result of relay breaching, but the relative proportions of branch-line and tip-line are different in each case. Following an initial breaching event, a progressive replacement of tip-lines by branch-lines is necessary for a stable geometry to evolve.

The examples given have all been of relays giving rise to neutral bends, of which many examples have been described (e.g. Larsen, 1988; Morley et al., 1990), but examples of restraining or releasing bends on normal faults are rare. This difference is most likely due mainly to data bias. Small outcrop examples of restraining and releasing bends and relays have been described (e.g. Newhouse, 1942; Peacock, 1990; Childs et al., 1996; Burhannudinnur and Morley, 1997) and a limited number of larger-scale structures have been interpreted from seismic data (Chapman and Meneilly,

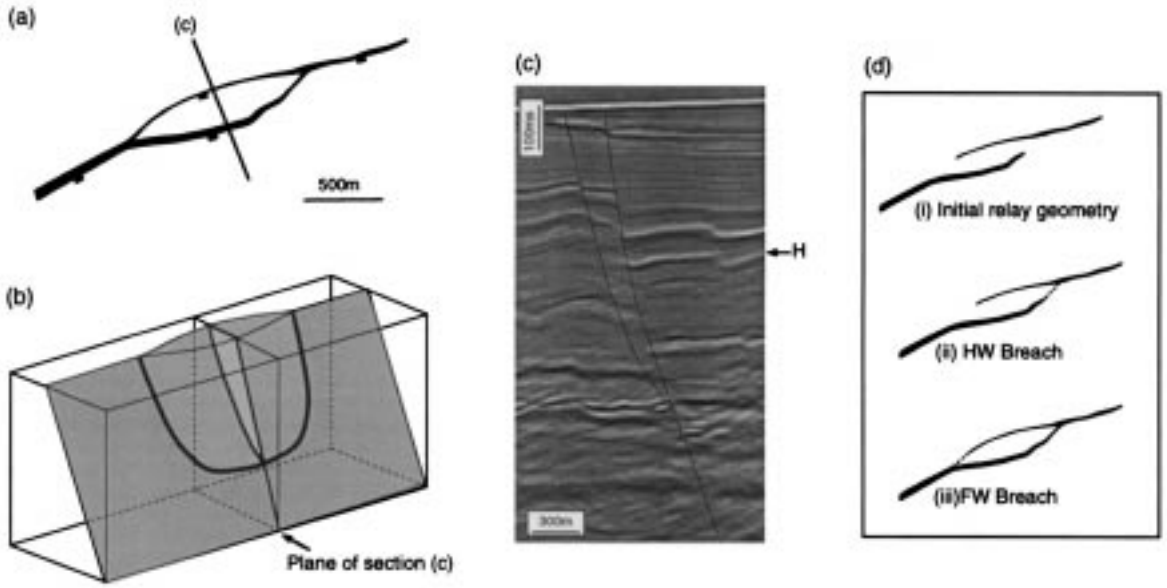

Fig. 3. (a) Fault polygons on horizon H [arrowed in (c)], with ticks on downthrown sides, enclosing a hostrock lens. Axes of the neutral fault bends are parallel to the normal fault slip direction. (b) U-shaped branch-line (heavy line) bounding the lens in (a), or incomplete horse, which terminates upwards at the sea floor (c). The location of the seismic section (c) is indicated. The branch-line is defined by data points (branch-points) on 42 seismic sections spaced at 25 m. (c) Seismic section [as located in (a) and (b)] showing interpreted fault traces and branch-point. Note the bed rotation within the relay, locally accommodating a small proportion of the aggregate throw across the structure. Vertical to horizontal scale is approximately 2.1:1 (1 ms = ca 1.25 m). (d) Interpreted growth sequence on horizon H for the breached relay, based on throw back-stripping of comparable structures (Childs et al., 1993, 1995). (i) Initial relay structure; (ii) breaching by both footwall and hanging wall faults; (iii) further growth by slip mainly or exclusively on the hanging wall fault with the re-joining splay inactive. Seismic from the Timor Sea.

1991; Nicol et al., 1996; Morley and Burhannudinnur, 1997). An example of a large, seismically imaged, contractional normal fault relay is illustrated in Fig. 5. The strain required to maintain compatibility between the overlapping fault strands and to transfer displacement between them is accommodated, at least partly, by bed rotation. If this bed rotation involved bed-parallel slip then the structure would approach that of a thrust duplex but with the bed-parallel slip in the opposite sense to that on the slip surfaces in a thrust duplex. The required shortening of the relay, parallel to the faults, is likely to be accommodated by compaction of the intervening sediments rather than by widening of the relay zone. As the bedding is at a high angle to the shortening direction, compaction will be concentrated within the most easily compacted layers. If bedding is sub-parallel to the shortening direction, as in a bed-parallel thrust overlap, then the shortening would also have to be accommodated by the least compactable units, promoting cross-faulting and duplex formation. Additional displacement on the fault array shown in Fig. 5 would be expected, eventually, to be accommodated by breaching by one or more cross-faults intersecting the original faults along horizontal branch-lines.

Determination of the three-dimensional geometry, including branch-lines, and interpretation of the evolution of a normal fault relay, is crucially dependent on a knowledge of the variation of throw values, which is readily obtained from seismic data. Where throw back-stripping is possible, the earlier stages of evolution of fault bends can also be determined objectively (Childs et al., 1993, 1995). As comparable quantitative data are not usually available for either thrust or strike-slip faults, we suggest that the rules established for normal faults using quantitative data be applied to the interpretation (and extrapolation) of thrusts and strike-slip faults for which the data are mainly two-dimensional and include few slip measurements.

4. General features of branch-lines and relays

In the normal fault arrays described, the branch-line orientations and geometries are interpreted in terms of the evolution of initial relays. We propose a similar origin for those associated with arrays of other types of faults. Although branch-lines were first defined to assist interpretation of thrusts, most branch-line geometries on thrusts have been inferred from observations of very few branch-points. However, the inferred thrust geometries (e.g. Boyer and Elliott, 1982) are not radically different from those objectively mapped in normal fault systems. This observation gives credence to our view that the displacement systematics of relays on normal faults provide an objec-

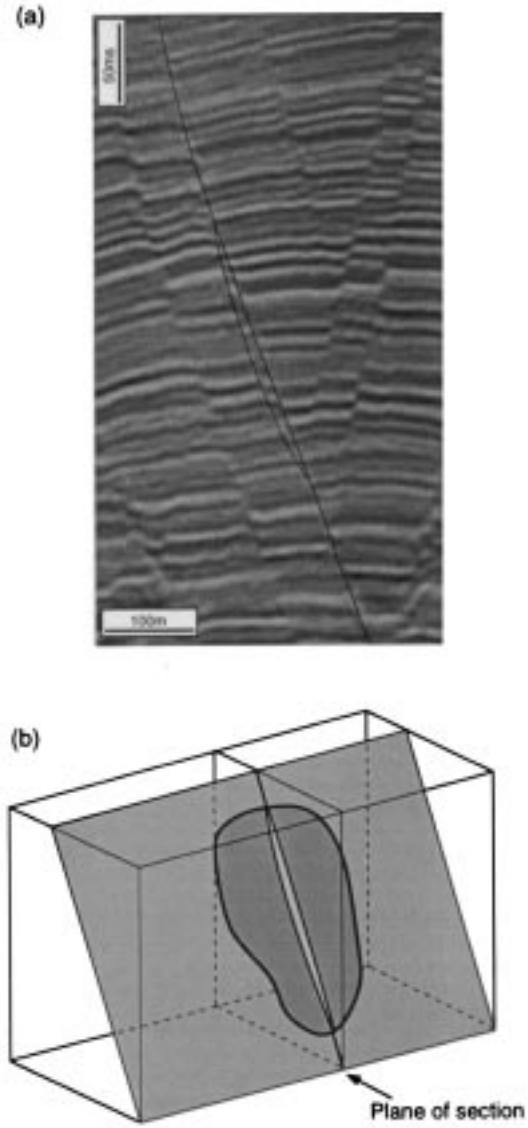

Fig. 4. (a) Seismic section with traces of one master fault and one rejoining splay interpreted. The splay terminates at two branch-points which lie on the closed loop of the O-shaped branch-line shown in (b) which bounds a horse. The maximum throw on the splay is 7 ms and the throw on the main fault where it bounds the horse is 12 ms. Vertical to horizontal scale is approximately 1.5:1 (1 ms = ca 1.25 m). (b) The O-shaped branch-line (heavy line) surrounds a horse (dark shading), lying along the surface of the main fault (light shading) and elongate in the slip direction. The plane of section in (a) is indicated together with the fault traces. The branch-line is defined by 22 branch-points on 11 seismic lines spaced at 12.5 m. Successive stages in the development of a comparable structure are given in Huggins et al. (1995), fig. 13. Seismic from the South-East Asia.

tive basis for interpreting duplexes and bends in both thrust and strike-slip systems and for anticipating the associated branch-line geometries. Which branch-line geometry is more common with each mode of faulting is determined by the type of relay (i.e. neutral, restraining or releasing) and the relative orientation of bedding within it.

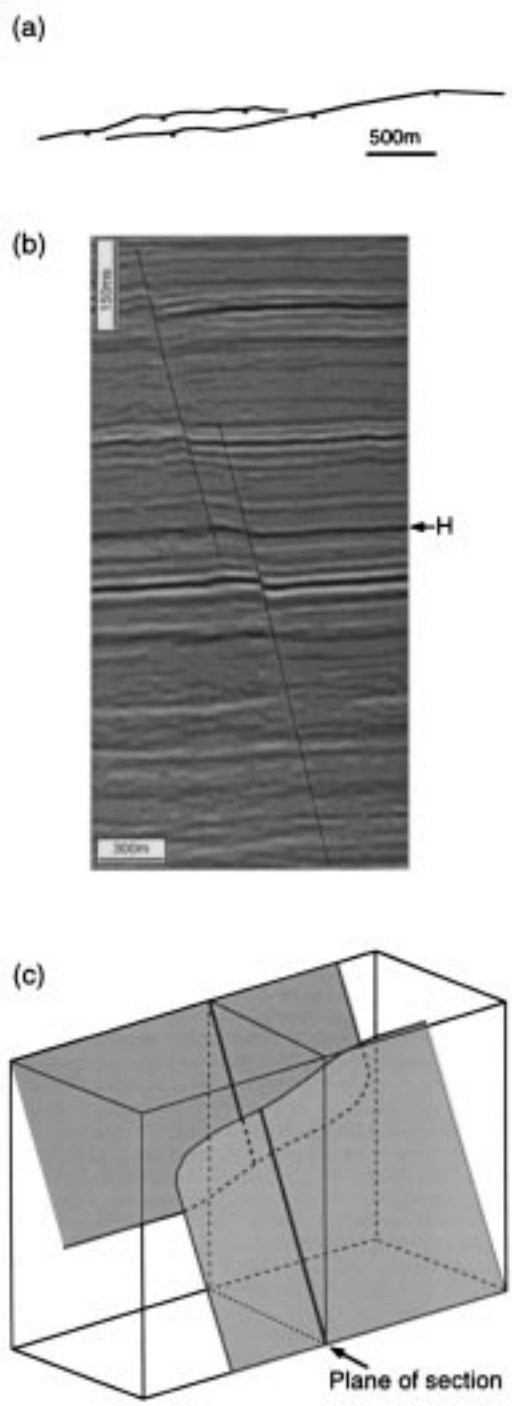

Fig. 5. (a) Fault polygons on a map of horizon H [arrowed in (b)] showing the long length of overlap relative to the separation distance, which would not be expected on a neutral relay. (b) Seismic section showing interpreted traces of overlapping normal faults forming an unbreached contractional relay. Note the increased bed dips within the relay which accommodate a simple shear and accounts for a high proportion of the total fault offset. The apparent offset of the strong reflection immediately below the lower tip-point of the footwall fault, is believed to be an artefact due to distortion of the seismic signal. (c) Block diagram of the relay shown in (a) and (b) with tip-lines bounding the fault surfaces (shaded); the plane of section in (b) is indicated. The tip-lines are mapped on 58 lines spaced at 25 m. Seismic from the Timor Sea.

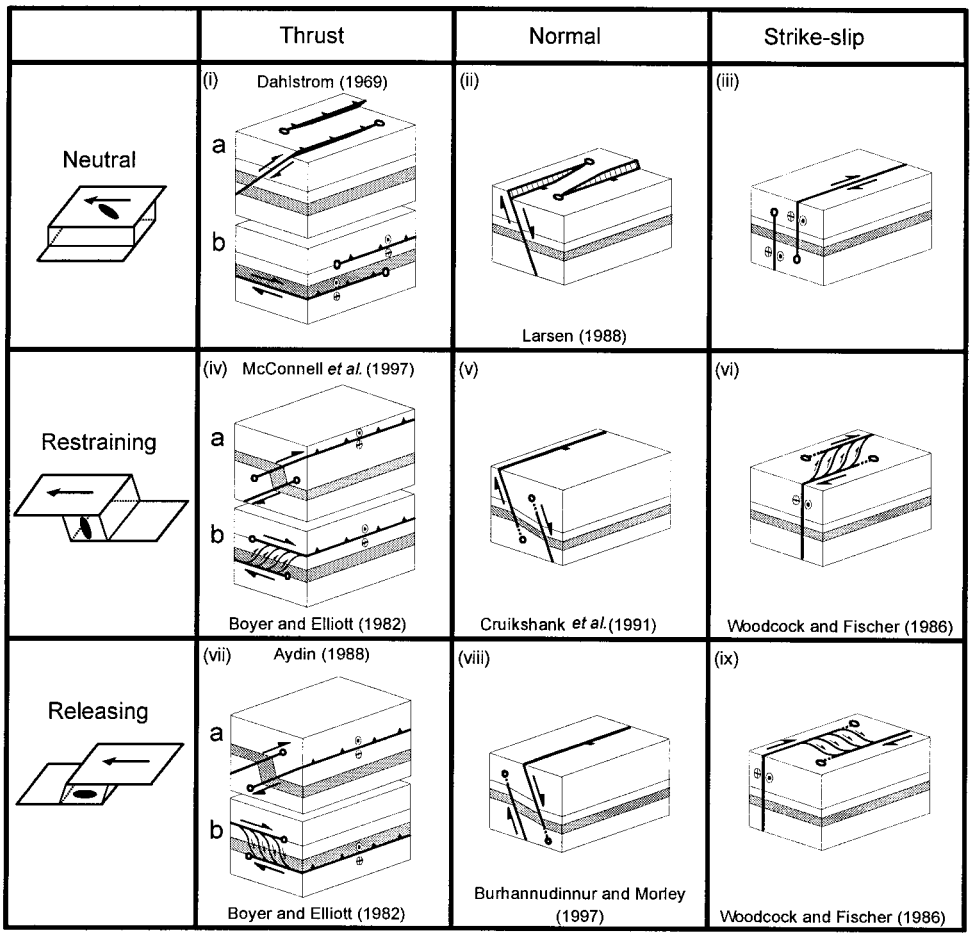

Fig. 6. Neutral, restraining and releasing relays and bends in relation to the mechanical anisotropy orientations typical of thrusts, normal faults and strike-slip faults offsetting sedimentary sequences, showing the different styles of accommodation of the relay strains. Two alternative responses are shown for each type of bend in relation to thrusts, one where the thrust surfaces are locally parallel to bedding and the other where they are at a relatively high angle to bedding. The reference to an illustrated example of each case is given where one is known ((i) Dahlstrom, 1969; (ii) Larsen, 1988; (iv) McConnell et al., 1997; Boyer and Elliott, 1982; (v) Cruikshank et al., 1991; (vi) Woodcock and Fischer, 1986; (vii) Aydin, 1988; Boyer and Elliott, 1982; (viii) Burhannudinnur and Morley, 1997; (ix) Woodcock and Fischer, 1986). Left hand column shows the orientation of the relay strain ellipse together with the slip direction (see text). Figs. 2–4 show examples of (ii) and Fig. 5 is an example of (v).

The strains associated with relays, and how readily hard-linkage occurs, are both strongly dependent on the orientations of the fault surfaces and of the slip directions relative to the mechanical anisotropy of the faulted sequence (Woodcock and Fischer, 1986; Peacock, 1990, 1991; Peacock and Sanderson, 1992). Figure 6 shows the nine states that result from combining the three modes of faulting (normal, reverse, strike-slip) and the three types of relay or bend (neutral, restraining, releasing). Of these nine types, those for which examples have been described are labelled. Two methods of breaching are shown for each type of thrust relay, because structures vary according to the angle between bedding and the local slip surfaces.

4.1. Neutral relays

In neutral relays on normal faults in more or less horizontally bedded sequences, bedding is optimally oriented to accommodate the shear strains involved in transferring displacement between overlapping faults by bed-parallel slip. We know of no description of neutral relays on thrust and strike-slip faults where the local fault slip vector is in the plane of bedding (Fig. 6, i(b) and iii, respectively). Such structures would be difficult to identify, even if actively sought, and there is a strong sampling bias against their identification. Bedding in such relays would not, however, be favourably oriented to accommodate simple shear strains and they would be expected to breach at an early stage of overlap.

Neutral relays on both strike-slip and thrust faults are more likely to be seen where the local slip vector is oblique to bedding. Examples of the neutral relays on thrust faults are the transfer zones between thrusts in map view as described by Dahlstrom (1969). Figure 7

Fig. 7. Inclined bedding surface (ca 52°) displaced by a segmented strike-slip fault with a neutral relay. The faulted bed geometry is identical to that at a neutral relay on a normal fault, offsetting horizontal beds. A compass clinometer below the relay indicates scale. Outcrop located at Collado de Fumanya, Catalonia, Spain.

shows an outcrop in which a segmented strike-slip fault, with a neutral relay, offsets steeply inclined (52°) bedding to provide bed geometries very similar to those of a neutral relay on a normal fault, with the relay occupied by a ramp. The fault surface geometry is that of Fig. 6(iii), but the faulted bed geometry is that of Fig. 6(ii).

4.2. Restraining and releasing bends

At restraining and releasing relays and bends on strike-slip and thrust faults (Fig. 6iv(b), vi, vii(b) and ix), bedding is again unfavourably oriented to accommodate soft-linkage. Hard-linked duplexes are, therefore, the primary means for accommodating the strains required to maintain compatibility, either across a relay or associated with a bend. In these circumstances the duplexes need not form by either forward or backward propagation (Boyer and Elliott, 1982; Woodcock and Fischer, 1986), but the duplex propagation direction is controlled by displacement transfer between segmented faults (Swanson, 1988; Tanner, 1992). Duplexing and horse formation might also be associated with restraining and releasing relays and bends on normal faults, but the bedding anisotropy is favourably oriented for accommodating the necessary compatibility strains without breaching.

As with neutral bends, a high angle between the local fault surfaces and the mechanical layering favours accommodation of the compatibility strains by bed rotation with bed-parallel slip (Gillespie, 1991). Given that these high angles between bedding and faults allow the strain to remain continuous, the faults remain soft-linked at higher displacement gradients than would otherwise be possible. We expect therefore, that non-neutral relays with high angles between bedding and slip direction will generally be less well connected than low angle systems as represented by bed-parallel thrusts (Tanner, 1992) and typical strike-slip relays.

4.3. General

For any given displacement gradient on any type of relay or bend in horizontal bedded sequences, thrust and strike-slip faults will be more connected than normal faults, i.e. hard-linked rather than soft-linked. In mechanically isotropic rock there should be no difference in the geometry of relays on the different modes of fault (Cruikshank et al., 1991), but the orientation of a relay axis relative to the slip direction will be critical in determining the intensity of fractures and any associated mineralisation within a relay or associated with a bend.

5. Conclusions

1. Seismic mapping of normal faults and their synthetic splays shows a range of branch-line forms from straight through L- and U-shapes to O-shaped closed loops which bound horses.
2. These branch-line geometries are interpreted as a growth sequence involving the progressive replacement of fault tip-lines by branch-lines during the development and breaching, or hard-linkage, of relay zones. Branch-line orientations are therefore not simply related to the fault slip direction.
3. The branch-line shapes mapped on normal faults are similar to those previously postulated on the basis of mostly two-dimensional data for reverse and strike-slip faults.
4. The orientation of a fault surface and slip direction relative to the primary rock anisotropy is a dominant control on the character and internal structure of relay zones. If the slip direction is parallel to layering, the survival of relays is inhibited and the propensity towards hard-linkage and duplexing is enhanced.

Acknowledgements

This investigation of branch-lines and relays was stimulated by work on several research projects over many years, most recently by the EC Non-Nuclear Energy Programme (Contract Nos JOF3-CT95-0014 and JOF3-CT97-0038) and by the DTI/OSO project 7234. Seismic sections illustrated in Figs. 3 and 5 are published with the permission of BHP Petroleum, who are gratefully acknowledged. Thanks to Paul Gillespie for providing the photograph in Fig. 7 and to other members of the Fault Analysis Group for useful discussion. Angus Moore and Geoff Tanner are thanked for their helpful advice.

References

Anders, M.H., Schlische, R.W., 1994. Overlapping faults, intrabasin highs and the growth of normal faults. Journal of Geology 102, 165–180.

Aydin, A., 1988. Discontinuities along thrust faults and the cleavage duplexes. Geological Society of America Special Paper 222, 223–233.

Boyer, S.E., Elliott, D., 1982. Thrust systems. American Association of Petroleum Geologists Bulletin 66, 1196–1230.

Burhannudinnur, M., Morley, C.K., 1997. Anatomy of growth fault zones in poorly lithified sandstones and shales: implications for reservoir studies and seismic interpretation: part 1, outcrop study. Petroleum Geoscience 3, 211–224.

Cartwright, J.A., Mansfield, C., Trudgill, B., 1996. The growth of normal faults by segment linkage. In: Buchanan, P.G., Nieuwland, D.A. (Eds.), Modern Developments in Structural Interpretation, Validation and Modelling, Geological Society, London, Special Publication, 99, pp. 163–177.

Chapman, T.J., Meneilly, A.W., 1991. The displacement patterns associated with a reverse-activated, normal growth fault. In: Roberts, A.M., Yielding, G., Freeman, B. (Eds.), The Geometry of Normal Faults. Geological Society, London, Special Publication, 56, pp. 183–192.

Childs, C., Easton, S.J., Vendeville, B.C., Jackson, M.P.A., Lin, S.T., Walsh, J.J., Watterson, J., 1993. Kinematic analysis of faults in a physical model of growth faulting above a viscous salt analogue. Tectonophysics 228, 313–329.

Childs, C., Watterson, J., Walsh, J.J., 1995. Fault overlap zones within developing normal fault systems. Journal of the Geological Society, London 152, 535–549.

Childs, C., Nicol, A., Walsh, J.J., Watterson, J., 1996. Growth of vertically segmented normal faults. Journal of Structural Geology 18, 1389–1397.

Cruikshank, K.M., Zhao, G., Johnson, A.M., 1991. Duplex structures connecting fault segments in Entrada Sandstone. Journal of Structural Geology 13, 1185–1196.

Dahlstrom, C.D.A., 1969. Balanced cross sections. Canadian Journal of Earth Sciences 6, 743–757.

Gillespie, P.A., 1991. Structural analysis of faults and folds with examples from the South Wales Coalfield and Ruhr Coalfield. Unpublished PhD thesis, University of Wales.

Huggins, P., 1996. Relay zones in intra-continental normal faults: geometry, mechanics and kinematics. Unpublished PhD thesis, University of Liverpool.

Huggins, P., Watterson, J., Walsh, J.J., Childs, C., 1995. Relay zone geometry and displacement transfer between normal faults recorded in coal-mine plans. Journal of Structural Geology 17, 1741–1755.

Larsen, P.-H., 1988. Relay structures in a Lower Permian basement-involved extension system, East Greenland. Journal of Structural Geology 10, 3–8.

McConnell, D.A., Kattenhorn, S.A., Benner, L.M., 1997. Distribution of fault slip in outcrop-scale fault related folds, Appalachian Mountains. Journal of Structural Geology 19, 257–267.

Morley, C.K., Burhannudinnur, M., 1997. Anatomy of growth fault zones in poorly lithified sandstones and shales: implications for reservoir studies and seismic interpretation: part 2, seismic reflection geometries. Petroleum Geoscience 3, 225–231.

Morley, C.K., Nelson, R.A., Patton, T.L., Munn, S.G., 1990. Transfer zones in the East African rift system and their relevance to hydrocarbon exploration in rifts. American Association of Petroleum Geologists Bulletin 74, 1234–1253.

Muraoka, H., Kamata, H., 1983. Displacement distribution along normal fault traces. Journal of Structural Geology 5, 483–495.

Newhouse, W.H., 1942. Structural features associated with the ore deposits described in this volume. In: Newhouse, W.H. (Ed.), Ore Deposits as Related to Structural Features. University Press, Princetown, pp. 9–53.

Nicol, A., Watterson, J., Walsh, J.J., Childs, C., 1996. The shapes, major axis orientations and displacement patterns of fault surfaces. Journal of Structural Geology 18, 235–248.

Peacock, D., 1990. Displacements, segment linkage and relay ramps in normal fault zones. Unpublished PhD thesis, University of Southampton.

Peacock, D.C.P., 1991. Displacements and segment linkage in strike-slip fault zones. Journal of Structural Geology 13, 1025–1035.

Peacock, D.C.P., Sanderson, D.J., 1991. Displacements, segment linkage and relay ramps in normal fault zones. Journal of Structural Geology 13, 721–733.

Peacock, D.C.P., Sanderson, D.J., 1992. Effects of layering and anisotropy on fault geometry. Journal of the Geological Society, London 149, 793–802.

Peacock, D.C.P., Sanderson, D.J., 1994. Geometry and development of relay ramps in normal fault systems. American Association of Petroleum Geologists Bulletin 78, 147–165.

Petersen, K., Clausen, O.R., Korstgård, J.A., 1992. Evolution of a salt-related listric growth fault near the D-1 well, block 5605, Danish North Sea: displacement history and salt kinematics. Journal of Structural Geology 14, 565–577.

Ramsay, J.G., Huber, M.I., 1987. The Techniques of Modern Structural Geology, Volume 2: Folds and Fractures. Academic Press, London.

Swanson, M.T., 1988. Pseudotachylyte-bearing strike slip duplex structures in the Fort Foster Brittle Zone, S. Maine. Journal of Structural Geology 10, 813–828.

Swanson, M.T., 1989. Sidewall ripouts in strike-slip faults. Journal of Structural Geology 11, 933–948.

Tanner, P.W.G., 1992. Morphology and geometry of duplexes formed during flexural-slip folding. Journal of Structural Geology 14, 1173–1192.

Walsh, J.J., Watterson, J., 1989. Displacement gradients on fault surfaces. Journal of Structural Geology 11, 307–316.

Walsh, J.J., Watterson, J., 1991. Geometric and kinematic coherence and scale effects in normal fault systems. In: Roberts, A.M., Yielding, G., Freeman, B. (Eds.), The Geometry of Normal Faults, Geological Society, London, Special Publication, 6, pp. 193–203.

Woodcock, N.H., Fischer, M., 1986. Strike-slip duplexes. Journal of Structural Geology 8, 725–735.